TMP100 *Temperature Module*

Maretron's TMP100 measures the temperature for up to 6 temperature probes and reports the information over an NMEA 2000® network. The TMP100 supports up to 4 thermistor probes and 2 high temperature thermocouple probes. Optional thermistor probes (-20°C to 80°C or -4°F to 176°F) cover a wide range of applications including cabin air temperature, engine room air temperture, refrigerator/ freezer temperature, under bolt temperature (inverters, charges, pumps, motors, etc.), tank temperatures (live well bait, hot water, etc.), and air duct temperatures. The optional thermocouple probes (0°C to 900°C or 32° to 1652°F) are used to measure Exhaust Gas Temperature (EGT) as part of a comprehensive fuel management system.

- Six External Temperature Probes are Measured and Broadcast Over NMEA 2000 Network
- Four Channels for Thermistor Probes and 2 Channels for High Temperature Thermocouple Probes
- Wide Variety of Applications Supported with Optional Temperature Probes
  - Cabin Temperature
  - Engine Room Temperature
  - Under Bolt Temperature (Inverters, Chargers, Pumps, etc.)
  - Refrigerator/Freezor Temperature
  - Tank Temperatures (Live Well Bait, Hot Water, etc.)
  - Air Duct Temperature
  - Exhaust Gas Temperature
- Optional Temperature Probes
  - Ambient Air Temperature Probe (-20°C to 80°C or -4°F to 176°F)
  - Ring Terminal Probe (-20°C to 80°C or -4°F to 176°F)
  - Immersion Probe for Tanks or Plenums (-20°C to 80°C or -4°F to 176°F)
  - Exhuast Gas Temperature Probe (0°C to 900°C or 32° to 1652°F)

Products

PART NUMBER	DESCRIPTION
TMP100-01	Temperature Module
TR3K	TMP100 Ring/Under Bolt Temperature Probe
TP-AAP-1	TMP100 Ambient Air Temperature Probe
TP-IP-1	TMP100 Immersion (Tanks, Plenums, etc.) Temperature Probe
TP-EGT-1	TMP100 Exhaust Gas Temperature (EGT) Probe

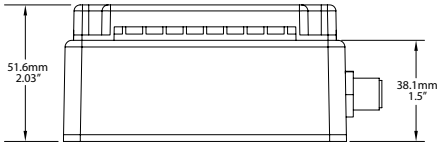

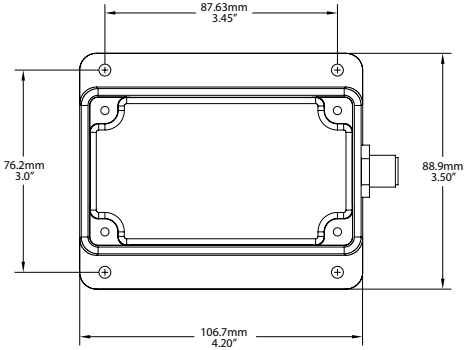

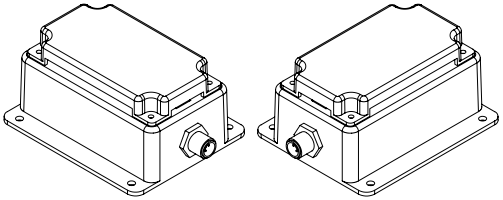

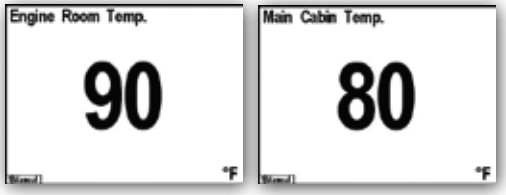

DSM250/DSM200 Screen Shots

Specifications

Parameter	Value	Comment
Measurement Range – Thermistor	-20°C to 80°C (-4°F to 176°F)	With supplied thermistor probe
Measurement Accuracy – Thermistor	± 2°C (± 3.6°F)	With supplied thermistor probe
Measurement Range – Thermocouple	+0°C to 700°C (32°F to 1292°F)	With supplied thermocouple probe
Measurement Accuracy – Thermocouple	± 2°C (± 3.6°F)	With supplied thermocouple probe

Certifications

Standard	Comment
NMEA 2000® Standard	Level A
Maritime Navigation and Radio Communication Equipment & Systems	IEC 61162-3
Maritime Navigation and Radio Communication Equipment & Systems	IEC 60945
FCC and CE mark	Electromagnetic Compatibility

NMEA 2000® Parameter Group Numbers

PGN#	PGN #	PGN Name	Default Rate
Periodic Data PGNs	127501	Temperature Sources: Sea Temperature Outside Temperature Inside Temperature Engine Room Temperature Main Cabin Temperature Live Well Temperature Bait Well Temperature Refrigeration Temperature Heating System Temperature Freezer Temperature	0.5 times/second
Response to Requested PGNs	126464	PGN List (Transmit and Receive)	N/A
	126996	Product Information	N/A
	126998	Configuration Information	N/A
Protocol PGNs	059392	ISO Acknowledge	N/A
	059904	ISO Request	N/A
	060928	ISO Address Claim	N/A
	065240	ISO Address Command	N/A
	126208	NMEA	N/A
Maretron Proprietary PGNs	128720	Configuration Exhaust Gas Temperature	N/A 0.5 times/second

Electrical

Parameter	Value	Comment
Operating Voltage	9 to 32 Volts	DC Voltage
Power Consumption	100 mA	NMEA 2000® Interface
Load Equivalence Number (LEN)	2	NMEA 2000® Spec. (1LEN = 50 mA)
Reverse Battery Protection	Yes	Indefinitely
Load Dump Protection	Yes	Energy Rated per SAE J1113

Mechanical

Parameter	Value	Comment
Size	3.50" x 4.20" x 2.03" (88.9mm x 106.7mm x 51.6mm)	Including Flanges for Mounting
Weight	13 oz. (368.5 g)	

Environmental

Parameter	Value
IEC 60945 Classification	Exposed
Degree of Protection	IP64
Operating Temperature	-25°C to 55°C
Storage Temperature	-40°C to 70°C
Relative Humidity	93%RH @40° per IEC60945-8.2
Vibration	2-13.2Hz @ ±1mm, 13.2-100Hz @ 7m/s² per IEC 60945-8.7
Solar Radiation	Ultraviolet B, A, Visible, and Infrared per IEC 60945-8.10
Corrosion (Salt Mist)	4 times 7days @ 40°C, 95%RH after 2 hour Salt Spray Per IEC 60945-8.12
Electromagnetic Emission	Conducted and Radiated Emission per IEC 60945-9
Electromagnetic Immunity	Conducted, Radiated, Supply, and ESD per IEC 60945-10
Safety Precautions	Dangerous Voltage, Electromagnetic Radio Frequency per IEC 60945-12

Copyright 2009 Maretron, LLP. All rights reserved. As Maretron is constantly improving its products, all specifications are subject to change without notice. Maretron's products are designed to be accurate and reliable; however, they should be used only as aids to navigation and vessel monitoring, and not as a replacement for traditional navigation and vessel monitoring techniques. A prudent captain or navigator never relies on a single source for navigation or system monitoring information. "NMEA 2000" is a registered trademark of the National Marine Electronics Association.